Series DA/DS

Bourdon Tube Pressure Switches

Pressure Ranges to 8000 psi (551.6 bar)

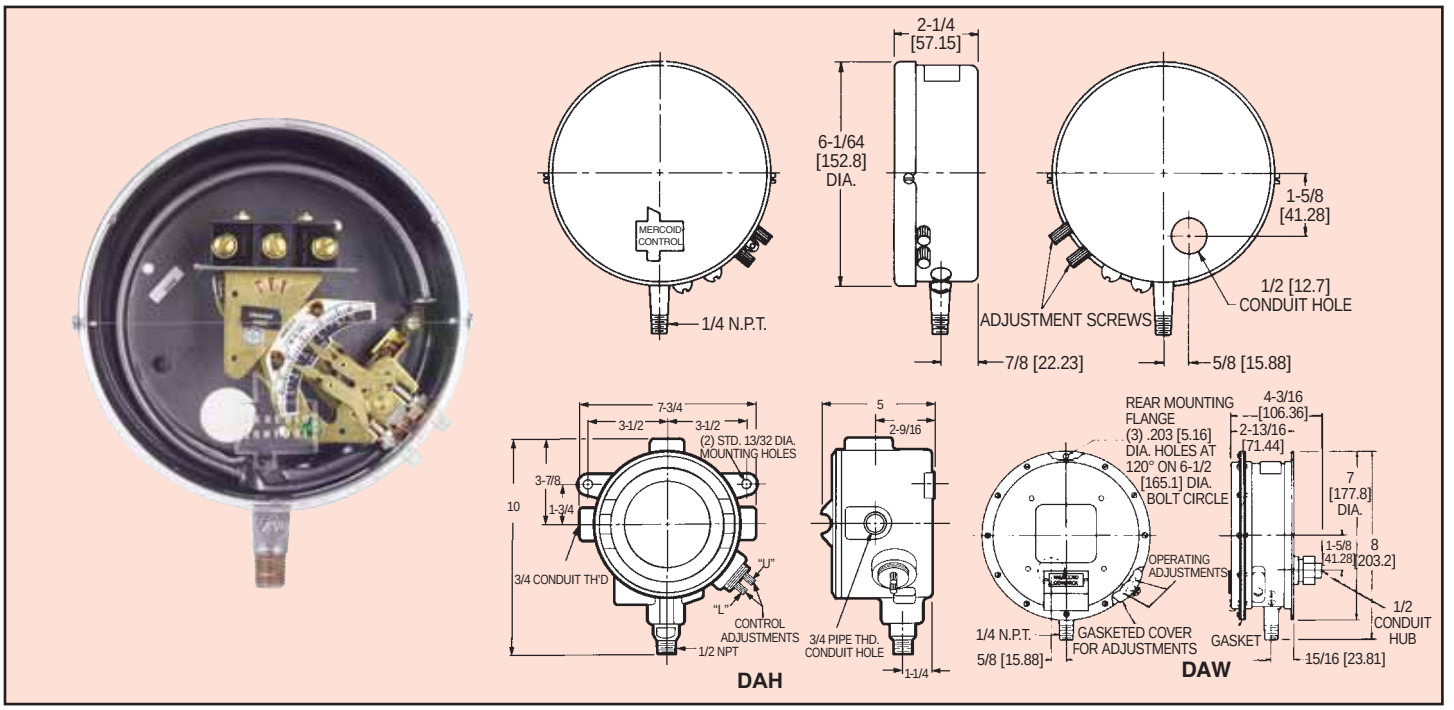

Customers tell us that this is the best pressure switch made. The Mercoid D Series is one of the world's broadest lines of pressure switches.

The D Series has extremely high sensitivity and great repeatability. The DA Models are equipped with two external adjustments, one for setting high pressure operating point, the other for setting low pressure operating point. Deadband, the difference between high and low setpoints, is adjustable over the full scale. The DS Models are equipped with a single external adjustment for setting operating point only. For mercury free switches choose between the snap action switch or hermetically sealed snap action switch. Hermetically sealed mercury switch also available.

FEATURES

- Visible calibrated dial
- On/off indication (except hermetically sealed snap switch models)
- Adjustable or fixed deadband
- SPDT snap-action, hermetically sealed snap action or hermetically sealed mercury switch
- External switch setpoint adjustments
- Minimum deadband is obtainable at any point in the range
- Pressure ranges of full vacuum to 8000 psig
- UL listed, CSA approved, many models FM approved
- General purpose, weatherproof or explosion-proof enclosures

OPTIONS

Weatherproof Enclosure, Series DAW – Add "W" to model number after DA or DS and change 1 to 3.
Example: DAW-33-153-7

Explosion-Proof Enclosure, Series DAH – Suitable for Class I, Groups C and D; NEMA 7; Class II, Groups E, F, G; Class III NEMA 9 and 9A, Division 1. Add "H" to model number after DA or DS.
Example: DAH-31-153-7

FM Approved: For general purpose and explosion-proof models see agency approvals. Add "F" to model number after DA, DS, DAH or DSH.
Examples: DAF-31-153-7 or DAHF-31-153-7

Other Options (Consult Factory): DPDT switches or other switch types, fixed deadband mercury switch units for low deadband applications, manual reset operation, two-stage operation, acetal bushed movement for applications with high amounts of vibration and/or pulsation, fungus proofing, siphon, diaphragm seals, mounting flange and remote connection.

SPECIFICATIONS

Wetted Materials: Brass, 403 SS, or 316 SS.
Temperature Limit: 180°F (82°C).
Pressure Limit: Maximum pressure of the operating range.
Enclosure Rating: General purpose, weatherproof or explosion-proof.
Repeatability: ±1% of full operating range, ±1.5% on DS-7300 models.
Switch Type: SPST mercury switch, SPDT mercury switch, SPDT snap switch, or SPDT hermetically sealed snap switch. Other circuit types available.
Electrical Rating: See model charts.
Electrical Connections: Screw terminal.
Conduit Connection: General purpose: 1/2″ hole for conduit hub; Weatherproof: 1/2″ conduit hub; Explosion-proof: 3/4″ female NPT.
Process Connection: General purpose and weatherproof: 1/4″ male NPT, 1/2″ male NPT on ranges 15S and 16S; Explosion-proof: 1/2″ male NPT and 1/4″ female NPT.
Mounting Orientation: Vertical.
Set Point Adjustment: Thumbscrew.
Weight: General purpose: 4 lb (1.8 kg); Weatherproof: 6 lb (2.7 kg); Explosion-proof: 8 lb (3.5 kg).
Deadband: See model chart.
Agency Approvals: CE, UL, CSA, FM (mercury switch units are not CE approved) (Consult factory for FM approved models).

D Series Pressure Switch with Mercury Switch and General Purpose Enclosure

Bourdon Tube Material	Adjustable Operating Range (psig)	Adjustable Deadband: Minimum Deadband (psig)	SPDT 4A @ 120 V 2A @ 240 V AC/DC	SPST Open on Increase 10A @ 120 V 5A @ 240 V AC/DC	SPST Close on Increase 10A @ 120 V 5A @ 240 V AC/DC	Minimum Deadband (psig)	SPST Open on Increase 5A @ 120 VAC 2A @ 240 VDC 2.5A @ 120 VDC 1A @ 240 VDC	SPST Close on Increase 5A @ 120 VAC 2A @ 240 VDC 2.5A @ 120 VDC 1A@ 240 VDC
	0-30″ Hg Vac	2″ Hg	DA-31-153-2	DA-31-2-2	DA-31-3-2	1″ Hg	DA-531-2-2	DA-531-3-2
	10″ Hg Vac - 12	1	DA-31-153-3	DA-31-2-3	DA-31-3-3	0.5	DA-531-2-3	DA-531-3-3
	25″ Hg Vac - 50	3.5	DA-31-153-27	DA-31-2-27	DA-31-3-27	2	DA-531-2-27	DA-531-3-27
	1/8 – 15	1	DA-31-153-1	DA-31-2-1	DA-31-3-1	0.5	DA-531-2-1	DA-531-3-1
	1/8 – 20	1	DA-31-153-3A	DA-31-2-3A	DA-31-3-3A	0.5	DA-531-2-3A	DA-531-3-3A
Brass	1 – 35	1.75	DA-31-153-4	DA-31-2-4	DA-31-3-4	0.75	DA-531-2-4	DA-531-3-4
	2 – 60	3	DA-31-153-5	DA-31-2-5	DA-31-3-5	1	DA-531-2-5	DA-531-3-5
	5 – 100	3.75	DA-31-153-6	DA-31-2-6	DA-31-3-6	2	DA-531-2-6	DA-531-3-6
	5 – 150	6	DA-31-153-7	DA-31-2-7	DA-31-3-7	3	DA-531-2-7	DA-531-3-7
	10 – 200	8	DA-31-153-8	DA-31-2-8	DA-31-3-8	3.5	DA-531-2-8	DA-531-3-8
	10 – 300	12	DA-31-153-9	DA-31-2-9	DA-31-3-9	6	DA-531-2-9	DA-531-3-9
	30″ Hg Vac – 60	6	DA-21-153-25S	DA-21-2-25S	DA-21-3-25S	3	DA-521-2-25S	DA-521-3-25S
	30″ Hg Vac – 75	8	DA-21-153-26S	DA-21-2-26S	DA-21-3-26S	4	DA-521-2-26S	DA-521-3-26S
	2 – 60	4	DA-21-153-5S	DA-21-2-5S	DA-21-3-5S	2.5	DA-521-2-5S	DA-521-3-5S
	5 – 100	6	DA-21-153-6S	DA-21-2-6S	DA-21-3-6S	3	DA-521-2-6S	DA-521-3-6S
	10 – 200	8	DA-21-153-8S	DA-21-2-8S	DA-21-3-8S	4	DA-521-2-8S	DA-521-3-8S
403	10 – 300	14	DA-21-153-9S	DA-21-2-9S	DA-21-3-9S	7	DA-521-2-9S	DA-521-3-9S
Stainless	40 – 350	14	DA-21-153-9AS	DA-21-2-9AS	DA-21-3-9AS	7	DA-521-2-9AS	DA-521-3-9AS
Steel	25 – 600	25	DA-21-153-10S	DA-21-2-10S	DA-21-3-10S	15	DA-521-2-10S	DA-521-3-10S
	50 – 1000	60	DA-21-153-11S	DA-21-2-11S	DA-21-3-11S	40	DA-521-2-11S	DA-521-3-11S
	100 – 1500	90	DA-21-153-12S	DA-21-2-12S	DA-21-3-12S	50	DA-521-2-12S	DA-521-3-12S
	300 – 2500	150	DA-21-153-13S	DA-21-2-13S	DA-21-3-13S	100	DA-521-2-13S	DA-521-3-13S
	500 – 5000	450	DA-21-153-15S	DA-21-2-15S	DA-21-3-15S	200	DA-521-2-15S	DA-521-3-15S
	800 – 8000	750	DA-21-153-16S	DA-21-2-16S	DA-21-3-16S	400	DA-521-2-16S	DA-521-3-16S
	30″ Hg Vac – 75	7	DA-41-153-26E	DA-41-2-26E	DA-41-3-26E	3.5	DA-541-2-26E	DA-541-3-26E
	5 – 75	3	DA-41-153-23E	DA-41-2-23E	DA-41-3-23E	2	DA-541-2-23E	DA-541-3-23E
	10 –100	7	DA-41-153-6E	DA-41-2-6E	DA-41-3-6E	3.5	DA-541-2-6E	DA-541-3-6E
316	10 – 150	6	DA-41-153-24E	DA-41-2-24E	DA-41-3-24E	3	DA-541-2-24E	DA-541-3-24E
Stainless	10 – 300	18	DA-41-153-9E	DA-41-2-9E	DA-41-3-9E	5	DA-541-2-9E	DA-541-3-9E
Steel	30 – 400	30	DA-41-153-21E	DA-41-2-21E	DA-41-3-21E	15	DA-541-2-21E	DA-541-3-21E
	75 – 800	75	DA-41-153-22E	DA-41-2-22E	DA-41-3-22E	35	DA-541-2-22E	DA-541-3-22E
	100 – 1000	100	DA-41-153-11E	DA-41-2-11E	DA-41-3-11E	45	DA-541-2-11E	DA-541-3-11E
	200 - 2500	210	DA-41-153-13E	DA-41-2-13E	DA-41-3-13E	110	DA-541-2-13E	DA-541-3-13E

D Series Pressure Switch with Snap Action Switch and General Purpose Enclosure

Bourdon Tube Material	Adjustable Operating Range (psig)	Adjustable Deadband SPDT: 10A @ 120/240 VAC: Minimum Deadband (psig)	Model	Fixed Deadband SPDT: 15A @ 120/240 AC: Fixed Deadband (psig)	Model	Hermetically Sealed, Fixed Deadband SPDT: 5A @ 120/240 VAC, 5A res. @ 30 VDC: Fixed Deadband (psig)	Model
	0-30″ Hg Vac	13.5″ Hg	DA-7031-153-2	3″ Hg	DS-7231-153-2	5″ Hg	DS-7331-153-2
	10″ Hg Vac - 12	6	DA-7031-153-3	1.5	DS-7231-153-3	3	DS-7331-153-3
	25″ Hg Vac - 50	12	DA-7031-153-27	2.5	DS-7231-153-27	3.75	DS-7331-153-27
	1/8 – 15	6	DA-7031-153-1	1.5	DS-7231-153-1	3	DS-7331-153-1
	1/8 – 20	6	DA-7031-153-3A	1.5	DS-7231-153-3A	3	DS-7331-153-3A
Brass	1 – 35	7.5	DA-7031-153-4	1.5	DS-7231-153-4	3	DS-7331-153-4
	2 – 60	9	DA-7031-153-5	2	DS-7231-153-5	3	DS-7331-153-5
	5 – 100	13.5	DA-7031-153-6	2.5	DS-7231-153-6	3.75	DS-7331-153-6
	5 – 150	24	DA-7031-153-7	3	DS-7231-153-7	5.25	DS-7331-153-7
	10 – 200	24	DA-7031-153-8	4	DS-7231-153-8	6.75	DS-7331-153-8
	10 – 300	37.5	DA-7031-153-9	5	DS-7231-153-9	9	DS-7331-153-9
	30″ Hg Vac – 60	18	DA-7021-153-25S	3.5	DS-7221-153-25S	5.25	DS-7321-153-25S
	30″ Hg Vac – 75	22.5	DA-7021-153-26S	3.5	DS-7221-153-26S	5.25	DS-7321-153-26S
	2 – 60	13.5	DA-7021-153-5S	3	DS-7221-153-5S	4.5	DS-7321-153-5S
	5 – 100	19.5	DA-7021-153-6S	3.5	DS-7221-153-6S	5.25	DS-7321-153-6S
403	10 – 200	22.5	DA-7021-153-8S	4	DS-7221-153-8S	7.125	DS-7321-153-8S
Stainless	10 – 300	28.5	DA-7021-153-9S	6	DS-7221-153-9S	10.5	DS-7321-153-9S
Steel	40 – 350	30	DA-7021-153-9AS	6	DS-7221-153-9AS	10.5	DS-7321-153-9AS
	25 – 600	67.5	DA-7021-153-10S	10	DS-7221-153-10S	18	DS-7321-153-10S
	50 – 1000	142.5	DA-7021-153-11S	20	DS-7221-153-11S	33	DS-7321-153-11S
	100 – 1500	195	DA-7021-153-12S	30	DS-7221-153-12S	52.5	DS-7321-153-12S
	300 – 2500	390	DA-7021-153-13S	60	DS-7221-153-13S	90	DS-7321-153-13S
	500 – 5000	1350	DA-7021-153-15S	200	DS-7221-153-15S	300	DS-7321-153-15S
	800 – 8000	2250	DA-7021-153-16S	500	DS-7221-153-16S		
	30″ Hg Vac – 75	15	DA-7041-153-26E	3.5	DS-7241-153-26E	5.25	DS-7341-153-26E
	5 – 75	12	DA-7041-153-23E	4	DS-7241-153-23E	6	DS-7341-153-23E
316	10 –100	15	DA-7041-153-6E	3.5	DS-7241-153-6E	5.25	DS-7341-153-6E
Stainless	10 – 150	16.5	DA-7041-153-24E	4	DS-7241-153-24E	6.75	DS-7341-153-24E
Steel	10 – 300	42	DA-7041-153-9E	8	DS-7241-153-9E	12	DS-7341-153-9E
	30 – 400	78	DA-7041-153-21E	10	DS-7241-153-21E	18	DS-7341-153-21E
	75 – 800	180	DA-7041-153-22E	25	DS-7241-153-22E	37.5	DS-7341-153-22E
	100 – 1000	285	DA-7041-153-11E	35	DS-7241-153-11E	52.5	DS-7341-153-11E
	200 - 2500	600	DA-7041-153-13E	75	DS-7241-153-13E	112.5	DS-7341-153-13E